RoHS Compliant

REV	DESCRIPTION OF CHANGE	DATE
A0	INITIAL RELEASE	2012-10-10

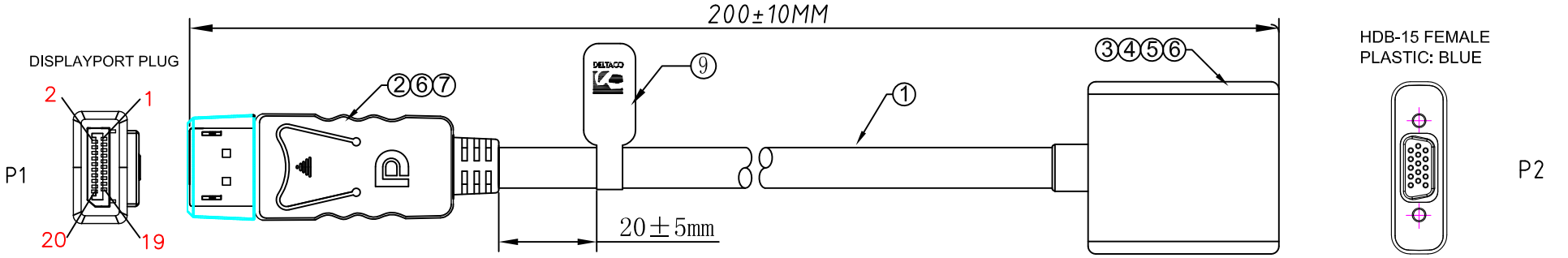

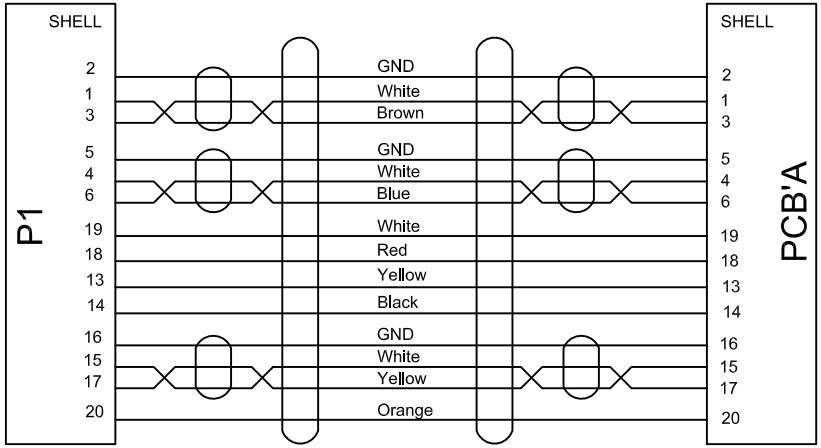

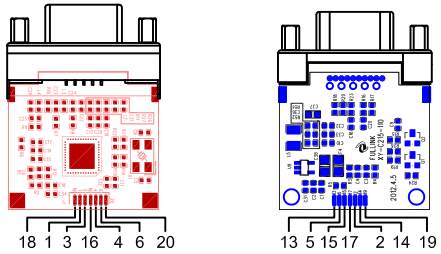

AN PCB'A

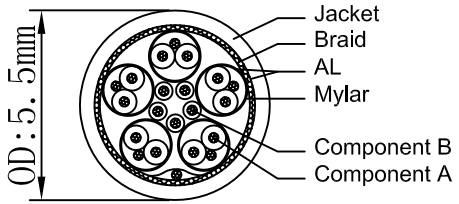

NOTES:

1. *ELECTRICAL PROPERTIES:*
   - *1.1 100% open and short test.*
   - *1.2 Conductor resistance: 5 OHMS*
   - *1.3 Insulation resistance: 10 MEGOHMS*
   - *1.4 Hi pot: DC300V/0.01S*
   - *1.5 Audio & Vedio test, Output resolution: 1920*1080 P*
2. *All material be ROHS compliant.*

NO.	Material name	Item number	Specifications Description	Quantity
9	tag	AM-BQ0267	White background, White character(DP-VGA8)	1 Pcs
8	Dust cap	OR-0008	DP Dust cap	1 Pcs
7	PE	PE-0001	LDPE(RoHs)-PE101	1.50g
6	PVC	PVC-0002	60P White PVC	10.45g
5	Shell	SL-BK0013	VGA,DVI,HDMI White Shell(smooth)	1 Pcs
4	Lid	SL-WH0018	HDMI White Top shell	1 Pcs
3	Connector	BM-F-036-GF-AN	VGA(F) PCB'A(AN),gold-plated	1 Pcs
2	Bottom ABS Shell	SL-BK0057	DP(M)White Shell,Bottom ABS Shell	1 Pcs
	Top ABS Shell	SL-WH0056	DP(M)White Shell,Top ABS Shell	1 Pcs
	Connector	CN-G0010	DP(M),gold-plated	1 Pcs
1	Cable	DP0-55-3201	UL20276(32AWG*1P+D+AL/MY)*5C+32AWG*5C+MY/AL+BRAID, JACKET PVC WHITE. OD=5.5±0.20mm L=145+5/-0MM	1 Pcs

图号 (DWG NO)	XY-A0594	单位 (UNIT): MM	DELTACO
版次 (REV):	A0	比例 (SCALE) 1:1	
页次 (PAGE):	1/1		
设计 (DESIGN)	Dean	DIMENSIONS ARE IN MILLIMETERS TOLERANCES: LINEAR: X ± 1.0, X.X ± 0.5, X.XX ± 0.15, X.XXX ± 0.05; ANGULAR: ± 0.5°	TITLE: DP to VGA Cable
审核 (CHECKED)			
核准 (APPROVED)			PART NO: DP-VGA8